ST-116C

SHINKO

GENERATOR TURBINES FOR LNG CARRIERS

RG90

RG90 GENERATOR TURBINES

Shinko RG90 steam turbines have been developed as drivers of generators for power plants for LNG carriers. On the basis of our many years of experience and service on various steam turbines, this type of turbine has been designed particularly for the purpose of reducing steam consumption. And, our RG90 steam turbines have the following features:

1. High thermal and mechanical efficiency
2. Rigid construction
3. Compact design
4. Simple operation and maintenance
5. Lower maintenance costs

GENERAL CHARACTERISTICS

Item		Model	RG 91	RG 92	RG 92-2
Max. generator output		(kW)	2000	3000	4000
Number of stages			Rateau 9-stage		
Max. inlet steam pressure		(MPaG)	6.5		
Max. inlet steam temperature		(°C)	Max. 530		
Exhaust steam		(kPa)	– 94.7		
Speed	Turbine rotor	(min^{-1})	9646	9566	8145
	Generator	(min^{-1})	1800		
Critical speed of turbine rotor		(min^{-1})	60 ~ 70% of turbine rotor speed		
Rotational direction of generator			Counter – clockwise facing generator		
Steam inlet bore		(mm)	80	100	125
Steam exhaust bore		(mm)	800	900	1000
Lubrication system			Forced lubrication (Turbine oil ISO VG68)		
Main LO pump		(m^3/h×MPaG)	15 × 0.85	20 × 0.85	22 × 0.85
Priming LO pump		(m^3/h×MPaG)	7 × 0.4	7.5 × 0.4	9 × 0.4
LO tank		(ℓ)	1500	1600	2400
LO cooler		(m^2)	24	27	30
Cooling water required (F.W.)		(m^3/h)	45	50	50
Speed regulating governor			Woodward UG-10D		
Momentary speed regulation			± 9%		
Permanent of speed regulation			0 ~ 4%		
Range of speed change			95~105% of rated speed		
Weight (excluding generator)		(kg)	14000	17500	20000

DESIGN & MATERIALS

In order to improve efficiency, attention has been paid to the design of both the nozzles and blades. The 3 governor valves are employed for a partial load.
In addition, the floating type labyrinth packing is fitted where the turbine shaft passes through the glands for the sake of safe operation.

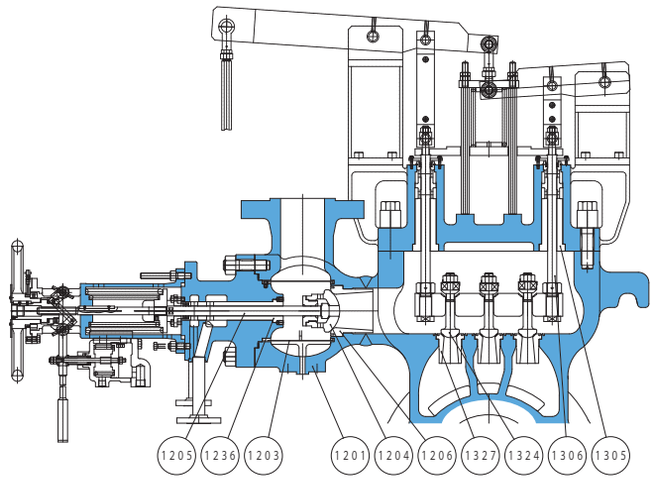

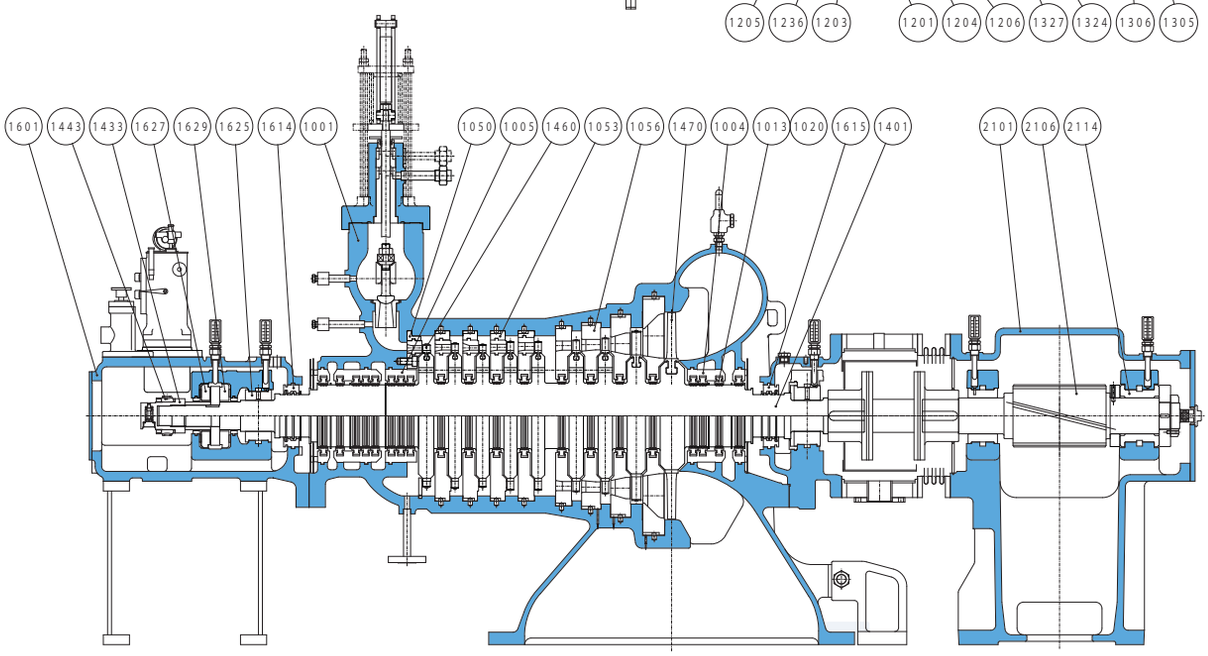

PART NO.	NAME OF PART	MATERIAL			REQ.NO. FOR 1 TURBINE	PART NO.	NAME OF PART	MATERIAL			REQ.NO. FOR 1 TURBINE
		NAME	JIS	ASTM EQUIVALENT				NAME	JIS	ASTM EQUIVALENT	
1001	TURBINE CASING	Cr-Mo CAST STEEL	SCPH32		1SET	1324	GOVERNOR VALVE	FORGED ALLOY STEEL	SFVA F12	A182 F12	3
1004	PACKING CASE	CARBON STEEL	S35C	A576 1035	1SET	1327	GOVERNOR VALVE SEAT	〃	〃	〃	3
1005	PACKING CASE	〃	〃	〃	1SET	1401	TURBINE ROTOR	Cr-Mo-V STEEL			1
1013	LABYRINTH PACKING	Ni-BRASS CASTING			20SETS	1433	TRIP SHAFT	CARBON STEEL	S35C	A576 1035	1
1020	SPRING	INCONEL			20SETS	1443	WORM GEAR	Ni-Cr STEEL	SNC631		1
1050	NOZZLE	FORGED ALLOY STEEL STAINLESS STEEL	SFVA F12 SUS410J1	A182 S41025	1SET	1460	MOVING BLADE	STAINLESS STEEL	SUS410J1	A276 S41025	1SET
1053	NOZZLE	CARBON STEEL STAINLESS STEEL	S25C SUS403	1025 S40300	1SET	1470	MOVING BLADE	12Cr-Mo-W-V STAINLESS STEEL	SUH616		1SET
1056	NOZZLE	DUCTILE CAST IRON STAINLESS STEEL	FCD400 SUS430	A536 S43000	1SET	1601	BEARING HOUSING	CAST IRON	FC200	A48 35	1SET
1201	EMERGENCY VALVE CASING	Cr-Mo CAST STEEL	SCPH32		1	1614	OIL GUARD	BRONZE	CAC406	C83600	1SET
1203	STEAM STRAINER	STAINLESS STEEL	SUS410	A276 S41000	1	1615	OIL GUARD	〃	〃	〃	1SET
1204	EMERGENCY VALVE	FORGED ALLOY STEEL	SFVA F12	A182 F12	1	1625	BEARING METAL	WHITE METAL WITH STEEL	W87 S25C	1025	1SET
1205	VALVE STEM	12Cr-Mo-W-V STAINLESS STEEL	SUH616 Q		1	1627	THRUST METAL	〃	〃	〃	1SET
1206	VALVE SEAT	FORGED ALLOY STEEL	SFVA F12	A182 F12	1	1629	THRUST PAD	〃	〃	〃	1SET
1236	BUSH	Aℓ-Cr-Mo STEEL	SACM645		1	2101	REDUCTION GEAR CASING	CAST IRON	FC200	A48 35	1SET
1305	BUSH	〃	〃		2	2106	PINION	Ni-Cr STEEL	SNC815		1
1306	VALVE STEM	12Cr-Mo-W-V STAINLESS STEEL	SUH616 Q		2	2114	BEARING METAL	WHITE METAL WITH STEEL	W87 S25C	1025	1SET

Speed Governing

Whenever variation in turbine speed occurs, the Woodward UG-10 constant speed governor senses it, operates the hydraulic servomotor pilot valve through the link lever, moves the hydraulic piston, and opens or closes the governor valves. Besides, the speed can be adjusted between 95~105 % of the rated speed by means of the speed setting knob provided on this governor or of the speed control switch in the engine control room.

Emergency Trip Device

When the turbine falls into a state of emergency as described on the table to the right, the control oil is cut off to release the oil pressure in the trip cylinder, and the emergency stop valve is closed instantly. This is how the turbine is stopped.

Emergency trip	Actuation
Mechanical overspeed trip	111% of rated speed
Electric overspeed trip	110% of rated speed
Low LO pressure trip	0.05MPaG
High back pressure trip	0.1MPaG
Hand trip	Push trip lever

Lubricating Oil System

Preparation and Start-up: When the priming LO pump is started, the control oil pressure and the LO pressure reach 0.3MPaG and 0.04MPaG respectively. Simultaneously, the main LO pump is primed. The bearings of the turbine and the generator are lubricated, and the trip cylinder interlock is released. When the emergency stop valve is opened and the governor valve is opened by actuating the starting lever, the turbine starts.

Operation: During the operation of the main LO pump, the control oil is adjusted to 0.65~0.85 MPaG by the oil pressure regulating valve leading to the trip system. Thus, the LO at 0.1 MPaG is led to the bearings and gearings.

Priming LO Pump: The priming LO pump automatically stops when the LO line pressure rises to 0.1~0.15MPaG after start up of the main LO pump. And, it restarts when the LO line pressure drops to less than 0.04MPaG.

LO Temperature Control Valve: The LO line is provided with a temperature control valve in the case of the sea water cooling system. When the LO temperature falls too low, the amount of the LO passing through the cooler decreases. Thus, the temperature control valve functions to stabilize the appropriate LO temperature between 35 ~ 45°C.

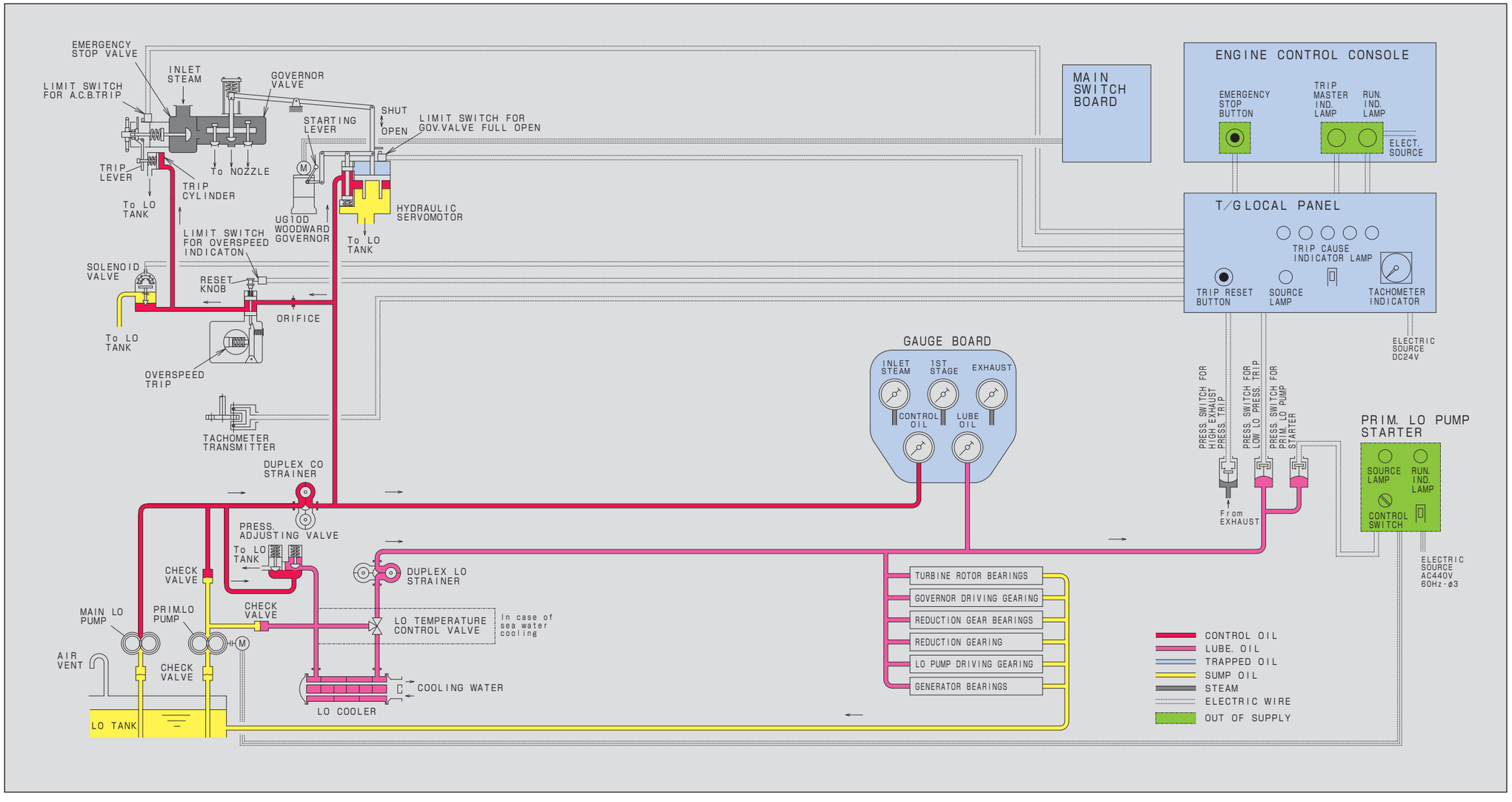

● Gland Seal

The floating type labyrinth packing is fitted to seal the glands through which the turbine shaft passes. Since the exhaust steam is led to the vacuum condenser, the coupling end gland creates a vacuum. Although the governor end gland is usually under positive pressure, it sometimes changes to a vacuum when the turbine operates with a low load. Therefore, consideration has been given to prevent air from entering into the turbine under any and all operating conditions by providing a sealing steam pressure controlling device.
Namely, the sealing steam from the low pressure steam line is supplied to the sealing steam receiver through the make-up valve which keeps the sealing steam line pressure between 0.001~0.02 MPaG through the pressure controller and spill valve. The gland steam is led to the gland condenser, keeping the pressure between 0~0.001 MPaG.

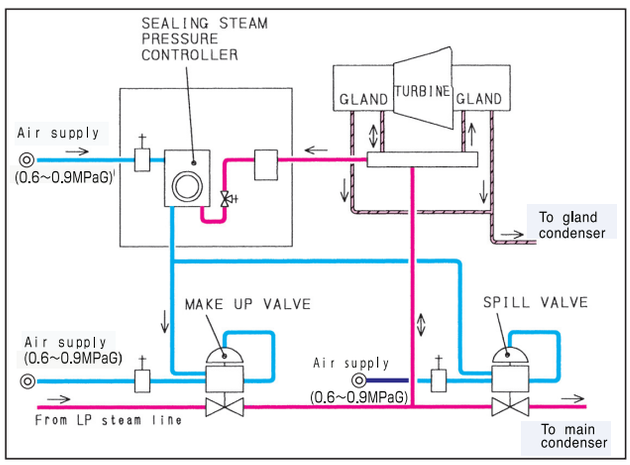

● Tachometer (Patented)

This tachometer, having three functions of showing the number of revolutions, the running indications, and the overspeed trip, is a patented electronic system.
As shown in the figure below, this system is composed of a transmitter, receivers, and speed relays, and needs no external power source.

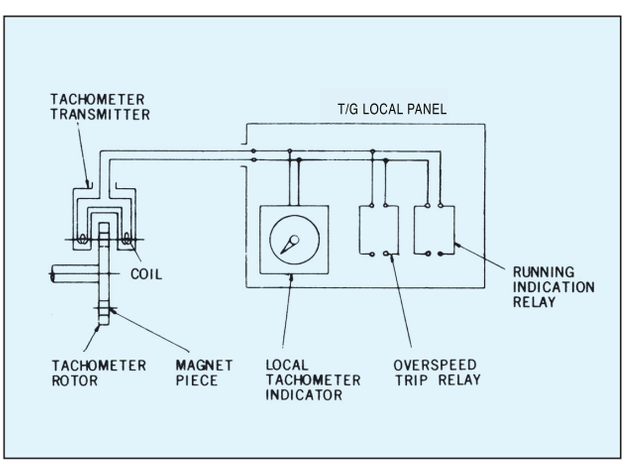

● Electric Turning Device

The electric turning device is positioned on the pinion shaft end through a manual operated clutch.

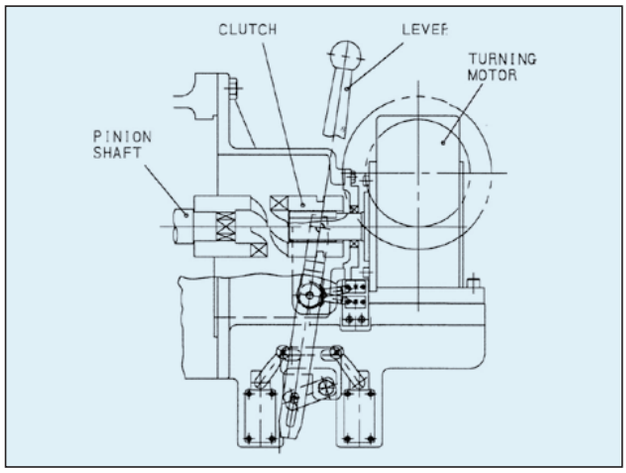

● Turbine Rotor Vibration Monitor

Vibration on the turbine rotor is detected by a sensor, and is indicated on the monitor in the engine control room. When abnormal vibration occurs, this device activates the alarm when it rises to 80μm, and trips at 140μm.

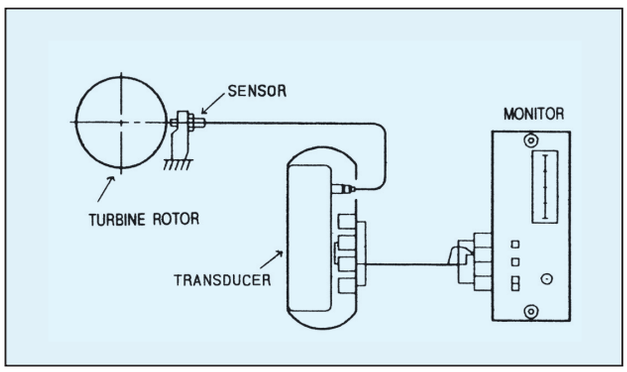

● Rotor Axial Movement Monitor (Option)

Axial movement of the turbine rotor is detected by a sensor, and is indicated on the monitor in the engine control room. When abnormal movement occurs, this device activates the alarm when it rises to 0.5mm, and trips at 0.7mm.

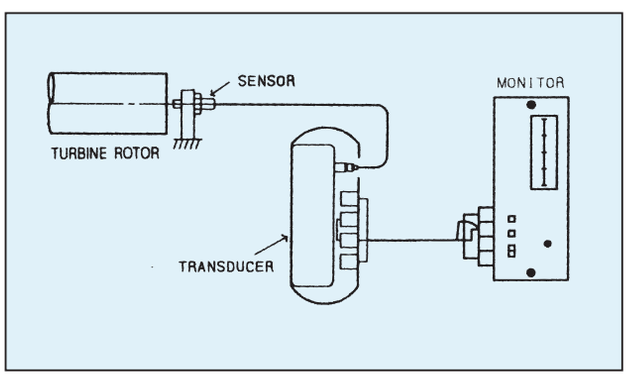

ACCESSORIES

	Item		Standard	Option	Notes
Safety devices	Overspeed trip	Electric	○		
		Mechanical	○		
	Low LO pressure trip		○		
	Low LO tank level alarm		○		
	High back presssure trip		○		Atm. press. operation
	Sentinel valve		○		
	Rotor vibration monitor (alarm & trip)		○		
	Rotor axial movement monitor (alarm & trip)			○	
	Hand trip device		○		
	Remote trip at T/G local panel		○		
	E.S.V. close (gen. ACB open)		○		
	Low sealing steam pressure alarm			○	
	Excess sealing steam pressure alarm			○	
	Thermo-sensor for bearings		○		Pt 100Ω
	Thermo-sensor for LO		○		Pt 100Ω
	LO temp. contorol valve	Wax type		○	for sea water cooling
		Air type		○	
Instruments	Pressure switch for inlet steam		○		
	Pressure transmitter for 1st stage			○	
	Pressure transmitter for exhaust steam			○	
	Pressure transmitter for LO			○	
	Pressure transmitter for seal steam			○	
Others	Electric turning device		○		
	Starter for turning motor & priming LO pump		○		
	Exhaust expansion joint			○	
	20 μm LO & control oil strainer		○		
	Duplex pressure gauge for LO strainer			○	
	High differential pressure alarm for LO strainer			○	
	LO-water separator (filter)			○	

STANDARD SPARE PARTS

Journal bearing metal 1/set*
Thrust bearing metal 1/set*
Each kind of spring for main parts 1/set*
LO pump bearing metal 1/set*
Priming LO pump bearing metal 1/set*
Oil strainer net 1/set*
Each kind of ball bearing 1/set*
LO cooler cooling tube .....2.5% of total amount/set*
Solenoid valve coil 1/set*
Special gasket 1/set*
Each kind of oil seal, O-ring, and gland packing 1/set*
Coupling bolt 1/set*
Each kind of auxiliary relay, lamp, and fuse for turbine control panel 1/set*

STANDARD TOOLS

Turbine casing lifting guide 1kit/set*
Turbine rotor lifting guide 1kit/set*
Turbine rotor lifting tool 1kit/set*
Turning bar 1/set*
LO cooler tube expander 1kit/set*
LO cooler tube remover 1/set*
LO cooler tube cleaner 1/set*
LO cooler plug 10/set*
(set* = all units of the same model and application)

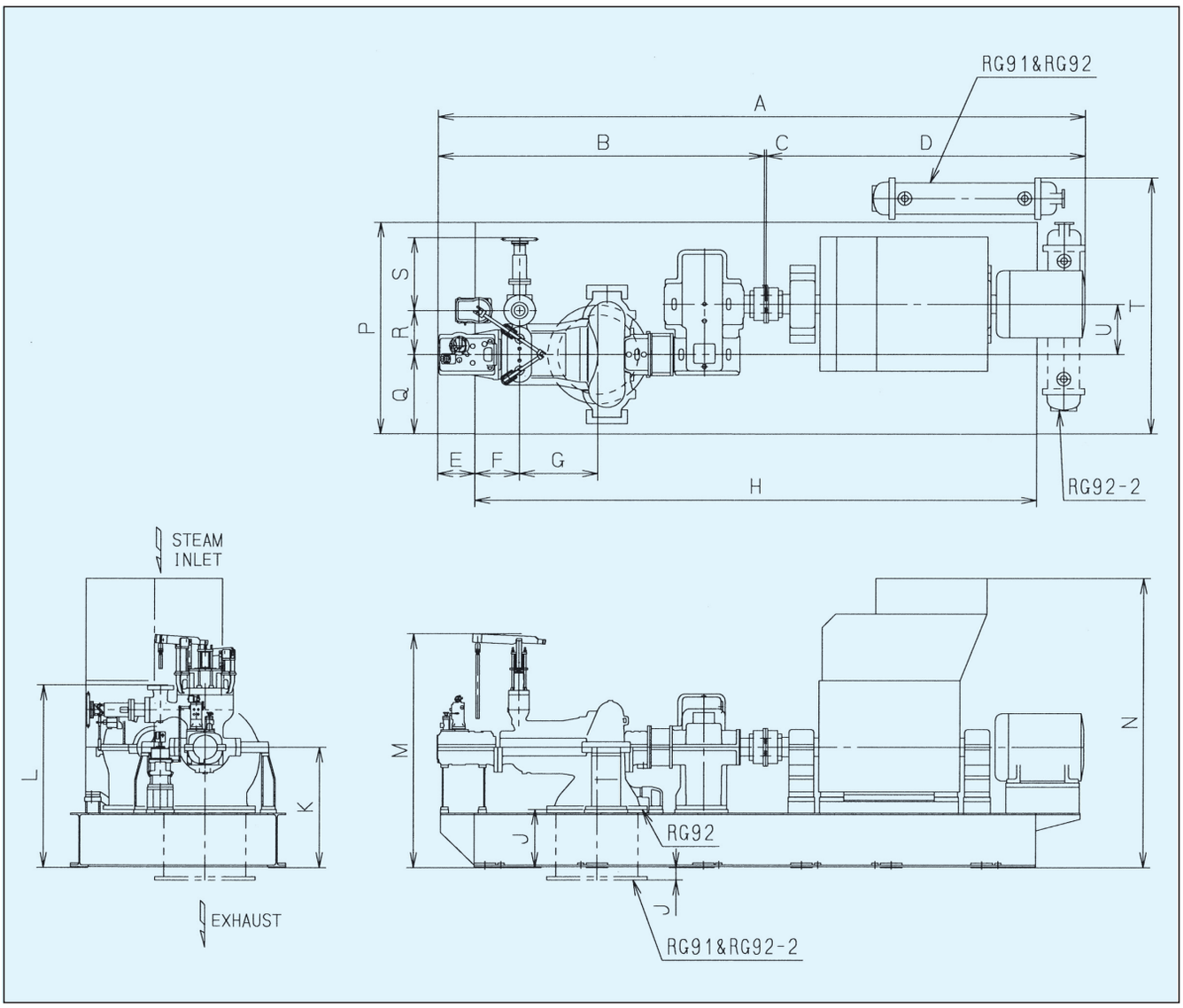

Dimensions : mm

Model	A	B	C	D	E	F	G	H	J	K	L	M	N	P	Q	R	S	T	U
RG 91	6525	3176	14	3335	420	485	744	6100	185	1220	1810	2290	2840	2300	889	370	600	2870	511
RG 92	7056	3668	23	3365	410	495	875	6300	650	1350	2300	2650	3290	2400	900	500	830	2910	570
RG 92-2	7478	3855	23	3600	402	530	960	6600	330	1450	2250	2800	3460	2400	1000	560	835	–	570

SHINKO IND. LTD.

Head Office
5-7-21, Ohzu, Minami-ku, Hiroshima, 732-0802, Japan
TEL: +81-82-508-1000
FAX: +81-82-508-1020

Tokyo Branch
6-1-8, Kitashinagawa, Shinagawa-ku, Tokyo, 141-0001, Japan
TEL: +81-3-3441-6221
FAX: +81-3-5488-7370

Kobe Sales Office
3-1-16, Nakamachidori, Chuo-ku, Kobe, Hyogo, 650-0027, Japan
TEL: +81-78-341-0919
FAX: +81-78-366-2027

Overseas Offices
Amsterdam, Bangkok, Singapore, Shanghai, Doha

www.shinkohir.co.jp/en/

Printed in Japan 2024-10-50Ⓣ