Horizontal single-stage single-suction CENTRIFUGAL PUMPS

SHINKO GJ

APPLICATIONS

General cooling pumps
Deaerator feed pumps
Fire pumps
Other general use

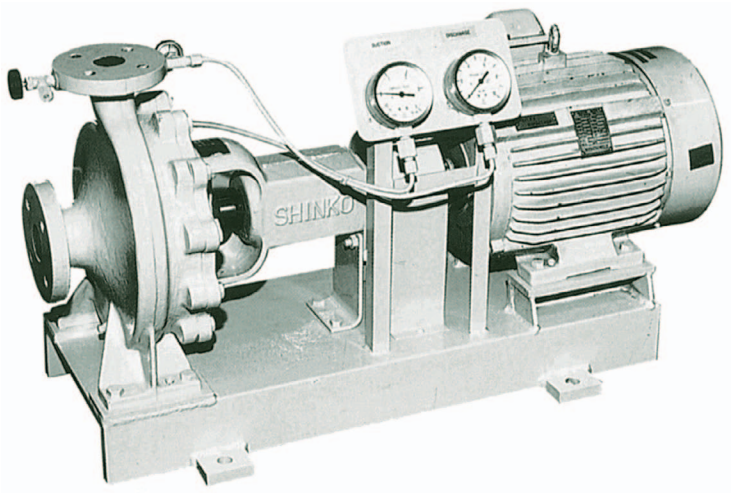

SPECIFICATIONS

Total head ..... 5 to 150m
Temperatures ..... Below 100℃

GENERAL CHARACTERISTICS

Item / Model	GJ 40	GJ 50	GJ 80	GJ 100	GJ 150
Rotation	Clockwise when viewed from the driver				
Suction bore (mm)	50	80	100	150	200
Discharge bore (mm)	40	50	80	100	150
Ball bearings	Single row deep groove sealed (63 type)				
Stuffing box seal	Gland packing or mechanical seal				
Weight with baseplate (kg)	90~120	90~180	130~205	195~265	230~305

DESIGN & STANDARD MATERIALS

PART NO.	NAME OF PART	MATERIAL		REQ.NO. FOR 1 PUMP
		NAME	JIS	
1	VOLUTE CASING	CAST IRON	FC200	1
2	VOLUTE COVER	〃	〃	1
7	BEARING HOUSING	〃	〃	1
16	IMPELLER	PHOSPHOR BRONZE	CAC502A	1
18	IMPELLER SHAFT	STAINLESS STEEL	SUS403	1
22	SLEEVE	〃	SUS304	1
27	IMPELLER NUT	〃	〃	1
31	PACKING	RUBBER		1
34, 35	BALL BEARING	SPECIAL STEEL		2
38A, B	MOUTH RING	BRONZE	CAC403	2
46	LANTERN BUSH	〃	CAC406	1
47	GLAND	〃	〃	1
49, 50	COUPLING	DUCTILE CAST IRON	FCD400	2
54	GLAND PACKING	CARBONIZED FIBER		1 SET
60	PACKING	RUBBER		1
318	COUPLING BOLT & NUT	STEEL	SS400	1 SET
319	COUPLING RING	RUBBER		1 SET

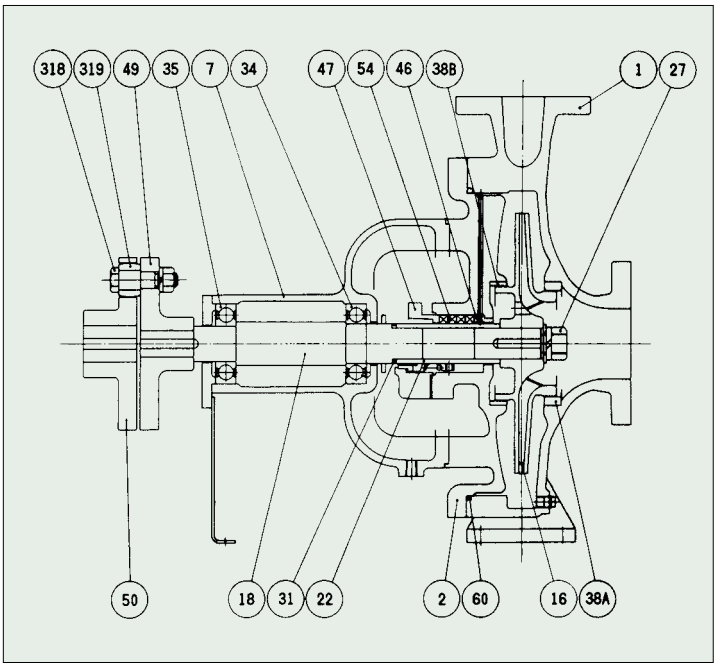

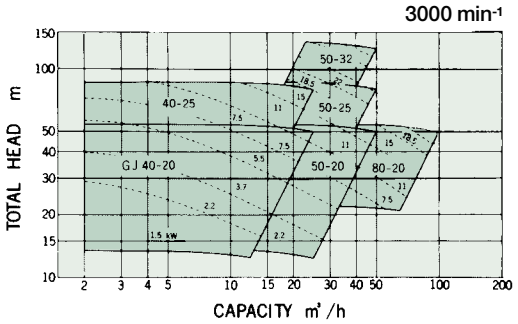

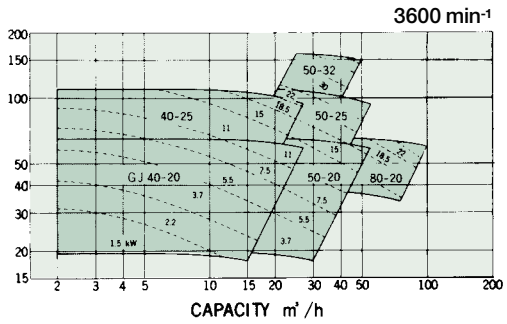

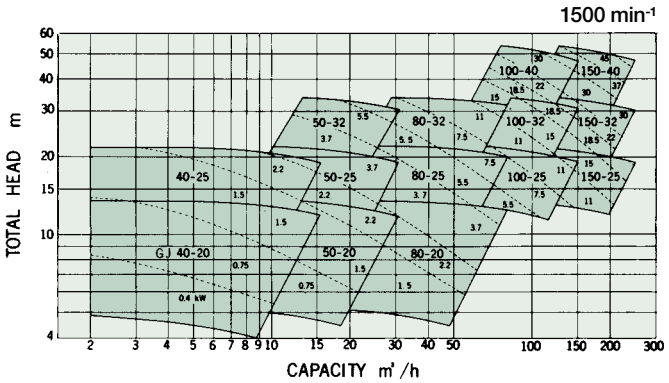

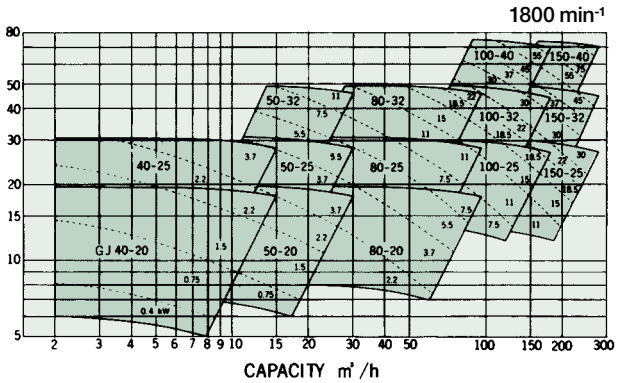

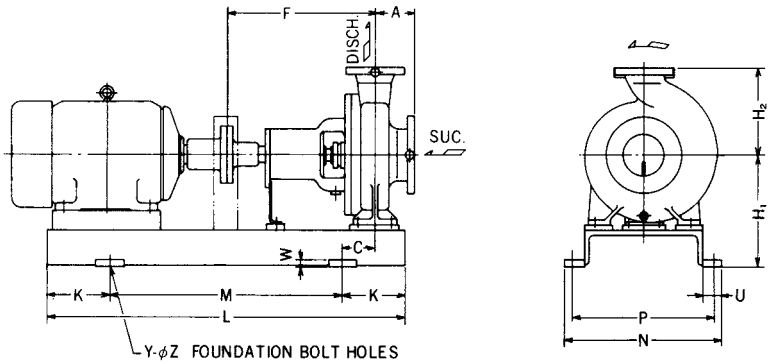

mm

Model	Bore Suc.	Bore Dis.	Motor frame NO.	A	C	F	H_1	H_2	K	L	M	N	P	U	W	Y	Z
GJ 40-20	50	40	90L	100	55	385	265	180	115	700	470	335	295	42.5	20	4	19
			160M	100	90	385	265	180	150	910	610	385	345	42.5	20	4	19
40-25	50	40	90L	100	57.5	390	285	225	130	710	450	385	345	42.5	20	4	19
			160L	100	97.5	390	285	225	170	970	630	385	345	42.5	20	4	19
50-20	80	50	90L	100	55	385	265	200	115	700	470	335	295	42.5	20	4	19
			160L	100	90	385	265	200	150	950	650	385	345	42.5	20	4	19
50-25	80	50	132S	125	77.5	390	285	225	150	810	510	385	345	42.5	20	4	19
			180L	125	117.5	390	285	225	190	1040	660	385	345	42.5	20	4	19
50-32	80	50	132M	125	77.5	434	330	280	150	890	590	385	345	42.5	20	4	19
			225S	125	117.5	434	340	280	190	1130	750	485	440	52.5	20	4	24
80-20	100	80	112M	125	57.5	405	285	250	130	780	520	385	345	42.5	20	4	19
			180L	125	117.5	405	285	250	190	1060	680	385	345	42.5	20	4	19
80-25	100	80	132M	125	60	434	340	280	150	910	610	465	425	42.5	20	4	19
			160L	125	80	434	340	280	170	1040	700	465	425	42.5	20	4	19
80-32	100	80	132M	125	80	434	365	315	170	910	570	465	425	42.5	20	4	19
			180M	125	100	434	365	315	190	1040	690	465	425	42.5	20	4	19
100-25	150	100	132M	140	80	482	340	280	170	960	620	465	425	42.5	20	4	19
			180M	140	100	482	340	280	190	1090	710	465	425	42.5	20	4	19
100-32	150	100	180M	140	100	482	365	315	190	1090	710	465	425	42.5	20	4	19
			200L	140	110	482	365	315	200	1200	800	485	440	52.5	20	4	24
100-40	150	100	180M	140	80	487	410	355	190	1110	730	470	430	50	20	4	19
			250S	140	120	487	430	355	230	1300	840	500	450	65	25	4	28
150-25	200	150	132M	140	80	487	365	355	170	960	620	465	425	42.5	20	4	19
			180L	140	110	487	365	355	200	1200	800	485	440	52.5	20	4	24
150-32	200	150	180M	140	80	487	410	355	190	1110	730	470	430	50	20	4	19
			225S	140	90	487	410	355	200	1220	820	470	430	50	20	4	24
150-40	200	150	180M	140	80	487	445	400	190	1110	730	470	430	50	20	4	19
			250M	140	120	487	465	400	230	1330	870	500	450	65	25	4	28

SHINKO IND. LTD.