Rateau 3-stage with integral reduction gear

STEAM TURBINES

SHINKO

RKR

APPLICATIONS

Generators
Pumps
Others

SPECIFICATIONS

Max. output ..... 3000 kW
Max. exhaust steam pressure .. 0.05 MPaG
Gland seal ..... Labyrinth packing
Lubrication system ..... Forced lubrication

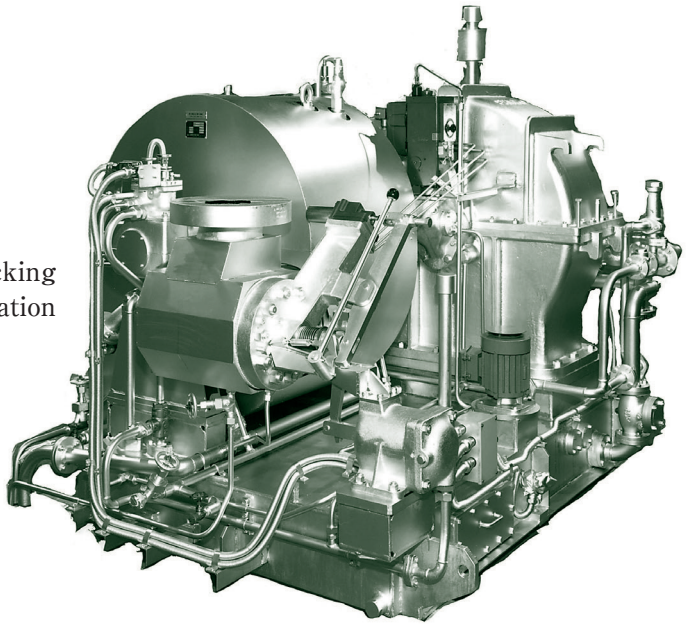

GENERAL CHARACTERISTICS

Item / Model		RKR
Max. output	(kW)	3000
Max. speed (turbine shaft)	(rpm)	7200
Speed (output shaft)	(rpm)	870 ~ 2000
Rotation of output shaft		CCW facing turbine toward driven machine
Max. inlet steam pressure	(MPaG)	3.3
Max. inlet steam temperature	(℃)	425
Max. exhaust steam pressure	(MPaG)	0.05
Steam inlet bore	(mm)	150
Steam exhaust bore	(mm)	600
Lubrication system		Forced lubrication
Main LO pump	(m^3/h x MPaG)	9 × 0.2
Aux. LO pump	(m^3/h x MPaG)	9 × 0.2
Governor		Woodward UG or PG
Weight (with baseplate)	(kg)	5300

Governor

Max. speed regulation ..... 0.5%, 0 ~ 4 %
Max. speed variation ..... ± 0.25%
Max. speed rise 7%
Speed range ..... + 5 ~ − 50%
NEMA class ..... D

Emergency Trip Device

Overspeed trip ..... 115% of rated speed
Low LO pressure trip ..... Below 0.05 MPaG

DESIGN & MATERIALS

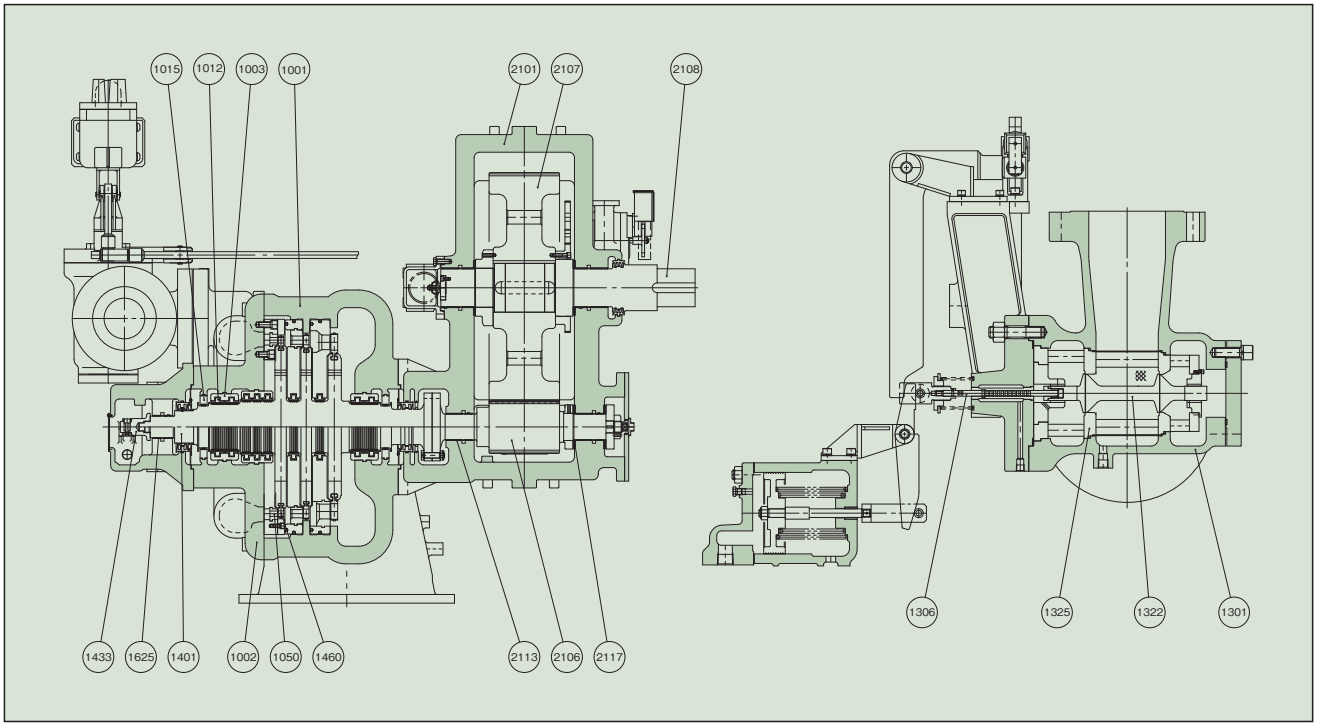

PART NO.	NAME OF PART	MATERIAL		REQ.NO. FOR 1 TURBINE	PART NO.	NAME OF PART	MATERIAL		REQ.NO. FOR 1 TURBINE
		NAME	JIS				NAME	JIS	
1001	TURBINE CASING	CAST STEEL	SCPH2	1SET	1401	TURBINE ROTOR	Cr-Mo STEEL		1
1002	STEAM CHEST	〃	〃	1SET	1433	OVERSPEED TRIP SHAFT	CARBON STEEL	S35C	1
1003	PACKING CASE	CARBON STEEL	S35C	1SET	1460	MOVING BLADE	STAINLESS STEEL	SUS410J1	1SET
1012	LABYRINTH PACKING	Ni-Br CASTING		9SETS	1625	BEARING METAL	WHITE METAL WITH STEEL	WJ2 S25C	1SET
1015	STEAM GUARD	BRASS PLATE WITH STEEL	C7521P S35C	1SET	2101	REDUCTION GEAR CASING	CAST IRON	FC200	1SET
1050	NOZZLE	STAINLESS STEEL	SUS403	1SET	2106	PINION & SHAFT	Ni-Cr-Mo STEEL	SNCM439	1
1301	GOVERNOR VALVE CASING	CAST STEEL	SCPH2	1	2107	WHEEL	FORGED STEEL	SF640B	1
1306	GOVERNOR VALVE STEM	STELLITE		1	2108	OUTPUT SHAFT	〃	SF540A	1
1322	GOVERNOR VALVE	STAINLESS STEEL	SUS420J2	1	2113	BEARING METAL	WHITE METAL WITH STEEL	WJ2 S25C	1SET
1325	GOVERNOR VALVE LINER	〃	SUS403	1	2117	THRUST BEARING METAL	〃	〃	1SET

OUTLINE DIMENSIONS
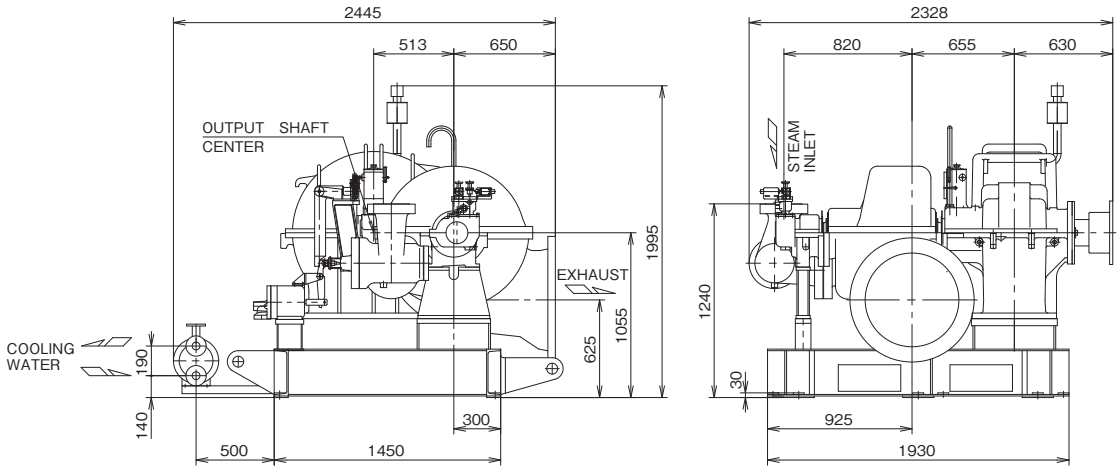
Dimensions : mm